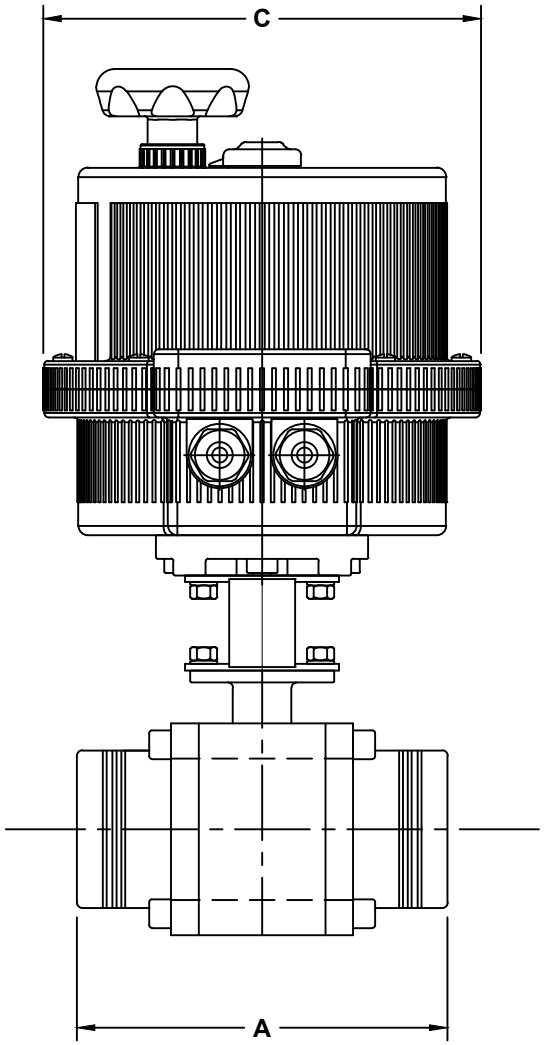

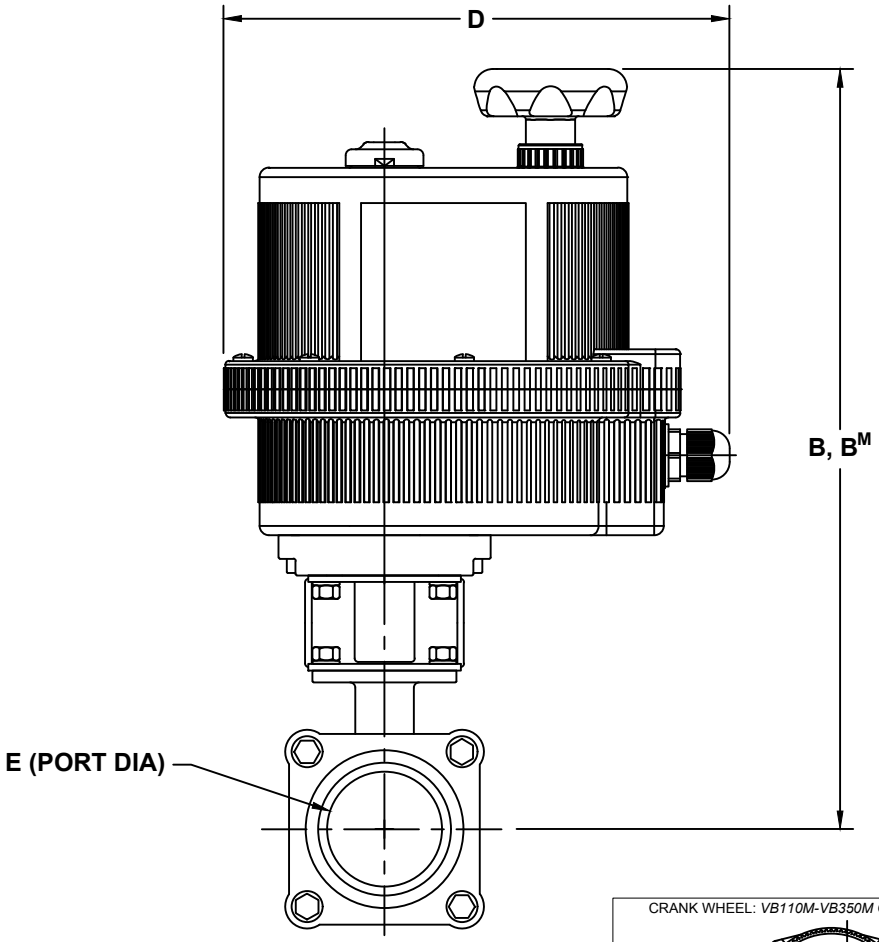

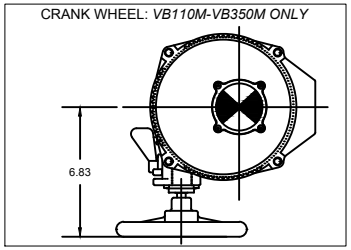

VALVE NOTES:

MATERIALS:
- *BODY, BALL AND CAP: ASTM A351 CF8M*
- *STEM: 316 SS*
- *SEAT: TFM (STANDARD)*
- *LIVE LOADED STEM 17-4PH S.S.*

SPECIFICATIONS:
- *ASME/ANSI B16.11 COMPLIANT*
- *FIRE SAFE TO API607-4 WITH GRAPHITE STEM PACKING (ADD 'G' SUFFIX, SEE ORDERING MATRIX IN CATALOG)*
- *ASME/ANSI B16 CLASS 600*
- *NACE MRO175*
- *FEDERAL SPECIFICATION WW-V-35C*
- *TESTED API-598*
- *29Hg-3000 PSI WOG COLD NON-SHOCK (1/4" thru 3/4")*
- *25Hg-2250 PSI WOG COLD NON-SHOCK(1" thru 2")*
- *TEMPERATURE (F) RATING DETERMINED BY SEAT MATERIAL UHMWPE: 225°, RPTFE: 450°, 50/50 525°, TFM(STANDARD), 525°*

ACTUATOR NOTES:
- *IP67 RATED*
- *2 LIMIT SWITCHES : STD*
- *INTERNAL HEATER: STD*
- *HIGH IMPACT ABS ACTUATORS LISTED AS STANDARD, METAL HOUSING UNITS AVAILABLE UPON REQUEST.*
- *-4°F TO 131°F*

STAINLESS STEEL S2F22 SOCKET WELD & NPT
ELECTRIC ACTUATED ASSEMBLIES

PART #	ACT. STANDARD	ACT. OPTIONAL	A (SW)	A (NPT)	B	C	D	E	B^M	BRACKET/ COUPLER
E∗∗∗/S3F22-2∗	VB015	VB030M	4.81	2.72	8.70	4.84	6.41	0.56	11.16	BK1-050I
E∗∗∗/S3F22-3∗	VB015	VB030M	4.81	2.72	8.70	4.84	6.41	0.69	11.16	BK1-050I
E∗∗∗/S3F22-4∗	VB015	VB030M	4.89	2.91	8.70	4.84	6.41	0.85	11.16	BK1-050I
E∗∗∗/S3F22-6∗	VB030	VB030M	5.17	3.38	8.86	6.18	7.48	1.07	11.32	BK1-050A
E∗∗∗/S3F22-8∗	VB030	VB030M	5.24	3.70	9.22	6.18	7.48	1.33	11.68	BK2-050B
E∗∗∗/S3F22-10∗	VB060	VB060M	5.72	4.09	12.53	7.28	8.43	1.67	12.79	BK2-075B
E∗∗∗/S3F22-12∗	VB110	VB110M	6.19	4.61	13.67	8.31	9.33	1.91	14.18	BK2-075B
E∗∗∗/S3F22-16∗	VB110	VB110M	6.62	5.20	13.67	8.31	9.33	2.41	14.43	BK2-075B

CONSULT ORDERING MATRIX FOR OPTIONS AND MATERIALS

*115V = 115VAC
*240V = 240 VAC
*012D = 12VDC
*024D = 24VDC
B^M = OPTIONAL METAL ACTUATOR
SUFFIX: *
W = SOCKET WELD
(BLANK) = NPT

THIS DOCUMENT IS PROPERTY OF UNIVERSAL COMPONENTS, INC.
ANY REPRODUCTION, DISCLOSURE, OR USE OF THIS DOCUMENT IS EXPRESSLY PROHIBITED UNLESS OTHERWISE AGREED UPON IN WRITING.
ALL SPECIFICATIONS SUBJECT TO CHANGE WITHOUT NOTICE.

UCI

DRAWING NAME:
ELECTRICALLY ACTUATED STAINLESS STEEL FULL PORT SOCKET WELD & NPT 2250 PSIG 3-PIECE VALVES

MATERIAL:	A	DRAWING NUMBER: E-ACT-S3F22-SERIES	REV. 2
SCALE: N.T.S.	NAME: MCH	DATE: 8-9-19	